2360 Boswell Road
Chula Vista, CA 91914
Phone 619.216.1444
Fax 619.216.1474
E-Mail tech@explorerprocomp.com

PRO COMP SUSPENSION

Suspension Systems that Work!

Part #52204 / 52204MX
2004 FORD F150 4WD
Kit Also Fits 2006 Lincoln Mark LT 4WD

This document contains very important information that includes warranty information and instructions for resolving problems you may encounter. Please keep it in the vehicle as a permanent record.

Box 1 of 4-PN 52204-1

Part #	Description	Qty.	Illus.	Page
90-1917	2004 FORD F150 REAR CROSSMEMBER	1	4	8
90-2403	2004 F150 COMPRESSION STRUT	2	13	12
90-1907	2004 F150 DIFFERENTAL DROP BRACE	1	6	9
90-1908	2004 F150 DIFFERENTIAL DROP BRACKET	2	5	8
13-90390	U BOLT	4	C	14
20-65302	9/16" HARDWARE PACK: U-BOLTS	1	C	14
95-254F	2.5" ALUMINUM BLOCK	2	C	14
90-6299	HARDWARE PACK: FRONT BRAKE LINE DROP	1	-	-
90-6189	HARDWARE PACK: DIFF VENT TUBE	1	-	-
90-2216	DIFF VENT EXTENSION	1	-	-
90-2217	HOSE MEMBER 5/16”	1	-	-
90-1955	2004/2005 F150 EMERGENCY BRAKE BRACKET	1	B	14
90-3272	2006 EMERGENCY BRAKE BRACKET	1	-	-
90-6422	HARDWARE PACK: E– BRAKE BRACKET	1	-	-
70-0501501500	1/2” X 1 1/2” HEX BOLT	1	-	-
73-05000530	1/2” SAE WASHERS	2	-	-
72-050100512	1/2” NYLOC NUT	1	-	-

Box 2 of 4-PN 52204-2

90-4092	KNUCKLE DRIVER 4WD	1	-	-
90-4093	KNUCKLE PASSENGER 4WD	1	-	-

Box 3 of 4-PN 52204-3

90-6263	HARDWARE PACK: COMPRESSION STRUT BUSHINGS	1	13	12
15-11148	BUSHING, URETHANE	8	-	-
90-2109	SLEEVE, COMPRESSION STRUT	4	-	-
90-6314	HARDWARE PACK: REAR BRAKE LINE DROP /BUMP EXT	1	A	13
70-0311001800	5/16-18 x 1 HEX CAP SCREW GR. 8 Z-YELLOW	1	-	-
72-031100816	5/16-18 UNITORQUE NUT GR. C Z	1	-	-
73-03100838	5/16 USS FLAT WASHER ZINC	2	-	-
70-0371501800	3/8-16 X 1 1/2 HEX CAP SCREW GR. 8 Z-YELLOW	2	not used	
72-037100816	3/8-16 UNITORQUE NUT GR. C Z	2	not used	
73-03700034	3/8 HARDENED FLAT WASHER F436 SAE Z-YELLOW	4	not used	
90-6322	HARDWARE PACK:	1	-	-
90-1915	2004 F150 COMPRESSION STRUT NUT PLATE	2	13	12
90-1966	DRILL TEMPLATE	1	4	8
90-6315	HARDWARE PACK: SWAY BAR DROP	1	12	11
70-0431751800	7/16-14 x 1 3/4" HEX CAP SCREW GR. 8 Z-YELLOW	4	-	-

Part #	Description	Qty.	Illus.	Page
72-043100816	7/16-14 UNITORQUE NUT GR. C Z	4	-	-
73-04300830	7/16 SAE FLAT WASHER ZINC	8	-	-
90-6313	HARDWARE PACK: 2004 F150 CROSSMEMBER	1	9	10
.180CNUCZ	18MM STOVER	4	-	-
.180NWHDZ	18MM WASHERS	8	-	-
90-6316	HARDWARE PACK: DIFF DROP	1	5	8
71-1210017510	12MM- 1.75 x 100MM HEX CAP SCREW 10.9 Z-Y	3	-	-
M12D985	12MM- 1.75 UNITORQUE NUT 10.9 C Z	3	-	-
73-01200830	12MM SAE FLAT WASHER ZINC	6	-	-
90-6324	HARDWARE PACK:	1	-	-
90-1974	ECCENTRIC CAM BOLT	4	9	10
90-6234	HARDWARE PACK: COMPRESSION STRUTS	1	13	12
70-0501251800	1/2"-13 X 1 1/4" GR 8 HEX BOLT	2	-	-
70-0504001800	1/2"-13 X 4" GR 8 HEX BOLT	4	-	-
72-050100816	1/2"-13 GR 8 STOVER NUT	4	-	-
73-05000034	1/2" SAE HARDENED FLAT WASHER	10	-	-
90-6317	HARDWARE PACK: SPACER MOUNT	1	10	11
72-043200810	7/16-20 GR. 8 PLATED HEX NUT	6	-	-
73-04300830	7/16 SAE FLAT WASHER ZINC	6	-	-
73-04300836	7/16 SPLIT LOCK WASHER	6	-	-
90-6319	HARDWARE PACK: ZIP TIES	1	-	-
10999	ZIP TIE, 11", BLACK	12	-	-
90-1912	2004 F150 SWAY BAR DROP	2	12	11
90-6255	HARDWARE PACK: STEERING RACK DROP	1	3	7
70-0625501800	5/8” X 5 1/2” GR 8 HEX BOLT	2	-	-
72-062100816	5/8” USS GR 8 STOVER NUT	4	-	-
73-06200034	5/8” SAE GR 8 FLAT WASHER	8	-	-
90-6323	HARDWARE PACK:	1	-	-
73-07500834	3/4" HARDENED FLAT WASER	1	B	14
90-1083	REAR BRAKE LINE DROP	1	A	13
90-55089-3	FRONT BRAKE LINE EXTENSION (PASS)	1	-	-
90-55089-4	FRONT BRAKE LINE EXTENSION (DRIVER)	1	-	-
90-1964	STEERING RACK RELOCATION BRACKET	2	3	7
90-2415	STEERING RACK SPACER	2	3	7
90-1104	COMPRESSION STRUT MOUNT	2	13	12
90-1897	2004 F150 FRONT CROSSMEMBER	1	8	10
90-6393	HARDWARE PACK: BRAKE LINE DROP (2005 MODEL)	1	-	-
90-3202	BRAKE LINE DROP	-	-	-

Box 4 of 4-PN 52204-4

929504	9000 SERIES SHOCK (REAR)	2	-	-
60859	SLEEVES	4	-	-
90-2416	COIL SPACER	2	10	11

Introduction:

- This installation requires a professional mechanic!
- We recommend that you have access to a factory service manual for your vehicle to assist in the disassembly and reassembly of your vehicle. It contains a wealth of detailed information.
- Prior to installation, carefully inspect the vehicle's steering and driveline systems paying close attention to the tie rod ends, ball joints, wheel bearing preload, pitman and idler arm. Additionally, check steering-to-frame and suspension-to-frame attaching points for stress cracks. The overall vehicle must be in excellent working condition. Repair or replace all worn or damaged parts!
- Read the instructions carefully and study the illustrations before attempting installation! You may save yourself a lot of extra work.
- Check the parts and hardware against the parts list to assure that your kit is complete. Separating parts according to the areas where they will be used and placing the hardware with the brackets before you begin will save installation time.
- Check the special equipment list and ensure the availability of these tools.
- Secure and properly block vehicle prior to beginning installation.
- ALWAYS wear safety glasses when using power tools or working under the vehicle!
- Use caution when cutting is required under the vehicle. The factory undercoating is flammable. Take appropriate precautions. Have a fire extinguisher close at hand.
- Foot pound torque readings are listed on the Torque Specifications chart at the end of the instructions. These are to be used unless specifically directed otherwise. Apply thread lock retaining compound where specified.
- **Please note that while every effort is made to ensure that the installation of your Pro Comp lift kit is a positive experience, variations in construction and assembly in the vehicle manufacturing process will virtually ensure that some parts may seem difficult to install. Additionally, the current trend in manufacturing of vehicles results in a frame that is highly flexible and may shift slightly on disassembly prior to installation. The use of pry bars and tapered punches for alignment is considered normal and usually does not indicate a faulty product. However, if you are uncertain about some aspect of the installation process, please feel free to call our tech support department at the number listed on the cover page. We do not recommend that you modify the Pro Comp parts in any way as this will void any warranty expressed or implied by the Pro Comp Suspension company.**
- If you use traction bars, ES9000 shocks may hit the traction bar mount, if it does a MX6 Series shock should be used.

Important!

Due to differences in manufacturing, dimensions and inflated measurements, tire and wheel combinations should be test fit prior to installation. Tire and wheel choice is crucial in assuring proper fit, performance, and the safety of your Pro Comp equipped vehicle. For this application, a wheel not to exceed 8” in width with a minimum backspacing of 4.5” to a maximum 5”, additionally, a 9” wheel with 5” of backspacing is also acceptable. A quality tire of radial design, not exceeding 35” tall X 13.5” wide is recommended. Please note that the use of a 35” X 13.5” tire may require fender modification. Violation of these recommendations will not be endorsed as acceptable by Pro Comp Suspension and will void any and all warranties either written or implied.

Please Note:

* Front suspension and head light realignment is necessary!
* Speedometer and ABS recalibration will be necessary if larger tires (10% more than stock diameter) are installed.
* Always use NEW cotter pins on re-assembly! (These items are NOT supplied)
* **IT IS ADVISABLE THAT YOU HAVE HELP AVAILABLE WHEN INSTALLING THIS KIT. SOME COMPONENTS ARE HEAVY AND AWKWARD. ADDITIONAL HELP IS GOOD INSURANCE AGAINST INJURY!**

Special Tools:

Please refer to your service manual for more information.
A special removal tool is required for safe removal of the tie rods. (PN T64P-3590-F).
These tool may be purchased at your local Ford dealer.
You may be able to rent any of these tools at your local parts store.

The following parts are used in conjunction with this kit and must be purchased separately.

Equipment Available from your Pro Comp Distributor!

Skid plates:	**52104 (4WD)**
Traction Bars (Extra cab):	**Mounting kit: 72095, Bars: 72500**
Traction bars (Super Crew cab):	**Mounting kit: 72096, Bars: 72500**
Coil over upgrade kit:	**52206MX (4WD)**
Add a leaf kit:	**13134**
Rear end shim kit:	**52700**
MX-6 Rear shock:	**MX6009 (4WD)**
MX-6R Reservoir Rear shock:	**MX6068R (4WD)**
MX-6R Reservoir Mounting Kit:	**63012 and 63013**

Also, Check out our outstanding selection of Pro Comp tires to compliment your new installation!

Front Installation:

1. Prior to installing this kit, with the vehicle on the ground. Measure the height of your vehicle . This measurement can be recorded from the center of the wheel, straight up to the top of the inner fender lip. Record the measurements below.

LF:_____ **RF**:_____

LR:_____ **RR**:_____

2. Ensure that your work space is of adequate size and the work surface is level. Place the vehicle in park and set parking brake. Place blocks both in front of and behind the rear wheels. Place your floor jack under the front cross member and raise vehicle. Place jack stands under the frame rails behind the front wheel wells and lower the frame onto the stands. Remove the jack and remove the front wheels.
3. Remove any skid plates if necessary.
4. Work on one side of the vehicle at a time.
5. Remove the front calipers from the front disks by removing the 2 retaining bolts.

   NOTE: Make sure you do not let the calipers hang on the brake lines or damage will occur.
6. Remove the front rotors from the front hub.
7. Remove the dust cap and the nut from the end of the CV in the hub and remove the bolts from the inner CV flange.
8. Remove the anti-lock wiring and sensor from the hub if applicable.
9. Remove the vacuum line from the rear of the hub.
10. Remove the tie rod end nut and separate from the knuckle .
11. Remove the upper ball joint nut from the knuckle and separate using the appropriate tool.
12. Remove the lower ball joint nut, separate using the appropriate tool. Remove the knuckle from the vehicle while pulling it away from the CV and set the knuckle aside.
13. Remove the nuts from the sway bar links on the lower a arm.
14. Mark the orientation and Remove the CV axles from the differential.
15. Remove the three nuts from the top of the coil over assembly and the one large nut and bolt on the bottom. Remove the coil from the vehicle.

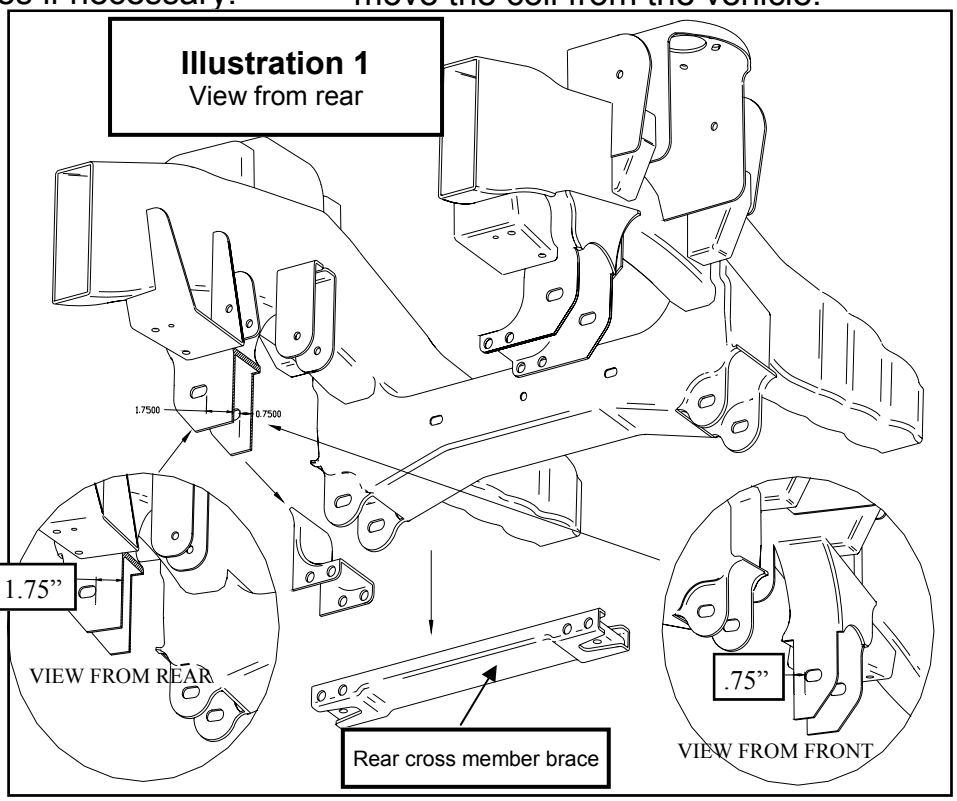

Illustration 1
View from rear

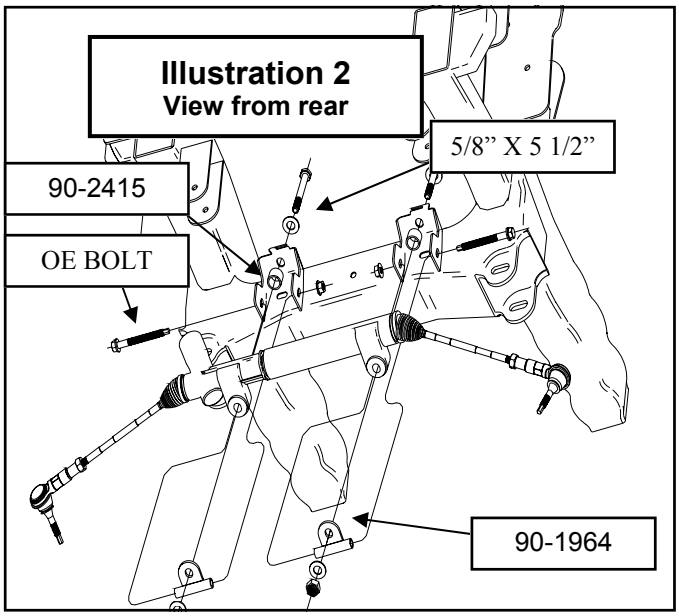

Illustration 2
View from rear

16. Remove the two bolts that retain the lower a-arms and remove them from the truck.
17. Repeat on the other side of the vehicle.
18. Remove the sway bar and brackets.
19. Mark the drive shafts orientation.
20. Disconnect the front drive shaft from the differential and secure up and out of the way.
21. Remove the rear cross member brace; retain 2 of the bolts and nuts for reuse. See **illustration 1**.
22. Make sure that the front differential is well supported, remove existing hardware from both passenger and driver side differential mounting areas. Carefully lower differential out of vehicle and set aside. Note the vent routing for reinstall. Be careful the differential is heavy.
23. Inspect the left (drivers), rear a-arm pocket . On the rear hole measure 1.75” from the inside edge of the hole to the inside of the truck and mark a line. See **illustration 1**.
24. On the front hole measure .75” from the inside edge of the hole to the inside of the truck and mark a line. Cut the left (drivers) rear a-arm pocket across these lines . See **illustration 1**.
25. Remove the steering rack mounting hardware and brackets. This hardware will be reused.
26. Install the steering rack using the new 5/8” hardware from pack 90-6255, the 1 inch spacers 90-2415 and new brackets 90-1964. See **illustration 2**.
27. Check for steering shaft clearance to frame and band clamps, the dust boot and the clamps may have to be repositioned or removed. Torque all steering rack hardware to specifications.
28. Install the differential drop brackets 90-1908 with the factory hardware into the frame, the jog will go towards the front of the truck. Leave loose. See **illustration 3 and 4**.
29. Install the rear cross member 90-1917 into the frame with the factory

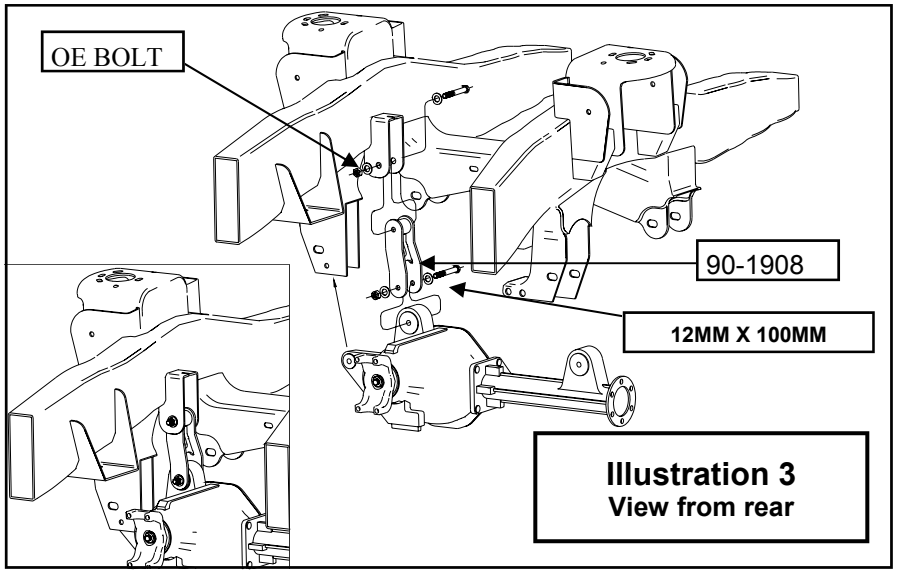

Illustration 3
View from rear

bolts. The heads will face the front of the truck. See **illustration 5**.

30. Place the drill template 90-1966 provided over the left rear cross member bolt and into the slotted hole in the new cross member. Using the template drill the new 1/2” hole through the factory frame. See **illustration 5**.

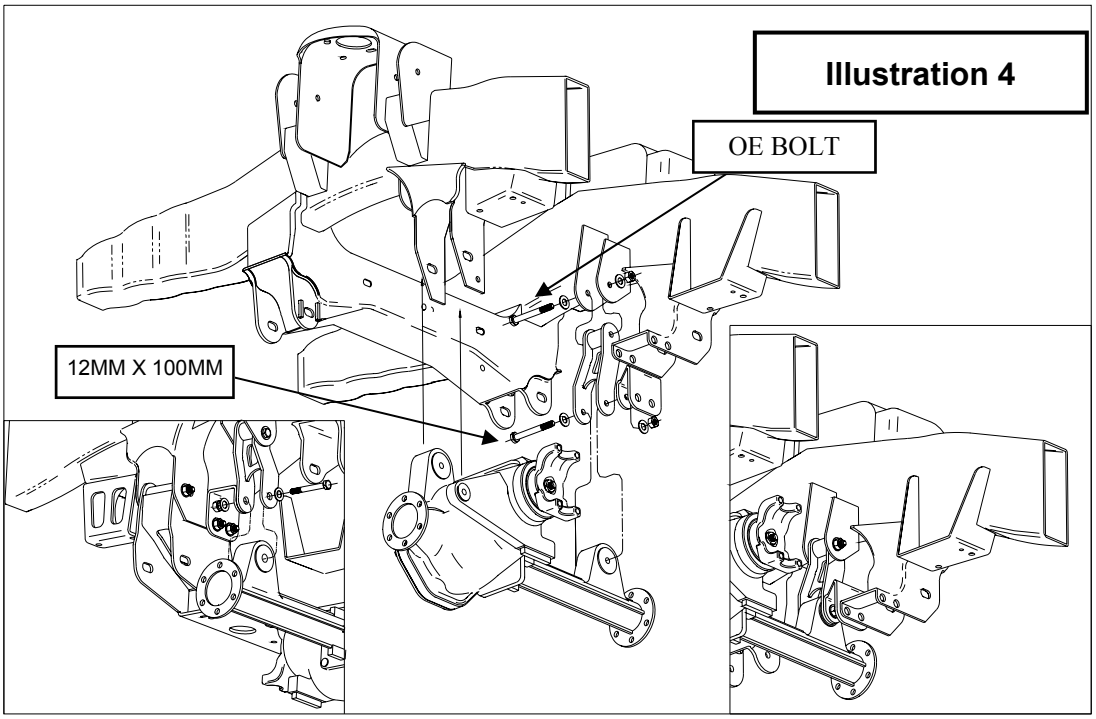

31. Remove the drivers side rear cross member bolt and swing the cross member away to the passenger side.
32. Hang the differential in the drop brackets with the supplied hardware from pack 90-6316. The bolt heads should face towards the front of the vehicle. Leave the bolts loose. See **illustration 3**.
33. Using the differential drop extension pack **(PN 90-6189)** fit the new hose to the differential. Place the supplied plug in the end of the tube and connect the factory tube to it. Route the vent hose as previously noted. Use the supplied zip ties to secure the hose.

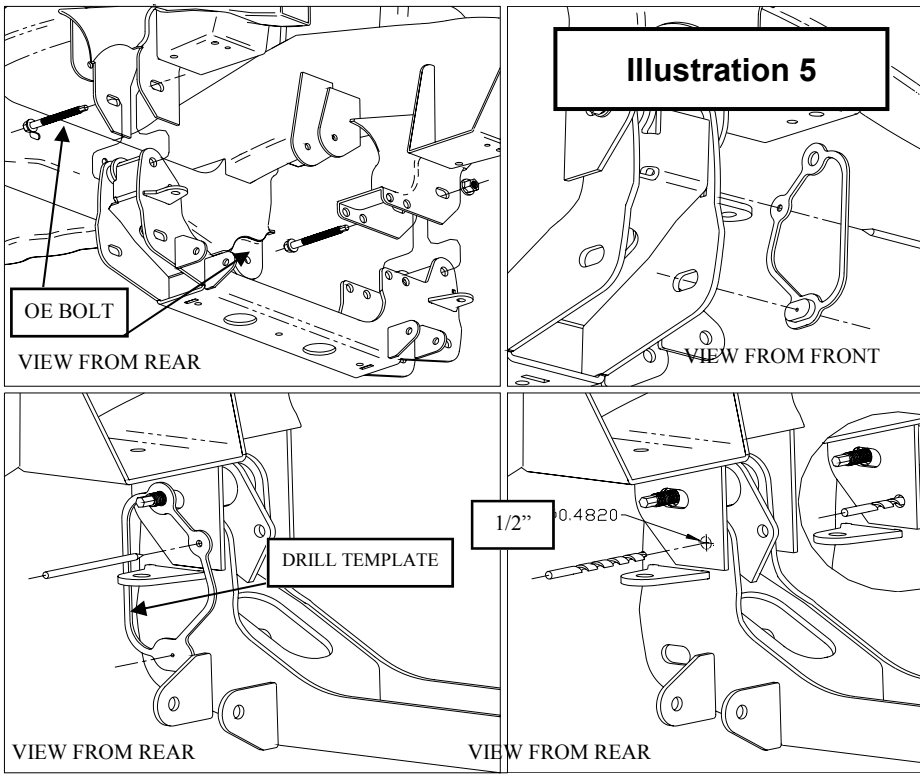

34. Swing the rear cross member up guiding the differential into the mounting pocket on the drivers side and reinsert the OE a-arm bolt that will now retain the new Pro-Comp cross member. See **illustration 6**.
35. Install the supplied bolt into the remaining differential mount on the drivers side.
36. Install the right side (passenger) differential drop brace 90-1907 using the two factory bolts from the rear cross member removed earlier and the one differential mount bolt. See **illustration 7**.
37. Install the front cross member 90-1897 into original front A-arm mounting locations, using the factory bolts with the heads to the front, leave loose. Make sure the cam guides face the inside. See **illustration 8**.
38. Install the lower a-arms into the new cross members with the supplied cam bolts 90-1974, washers and nuts. The cams should fit between the cam guides on the cross members. Center the cams in the guides. You will torque the bolts at the end of the install when the vehicle is on the ground. See **illustration 9**.
39. Torque the front and rear cross member mounting bolts to 135 ft./lbs.
40. Tighten all of the remaining hardware to factory specifications.
41. Install the front sway bar drop brackets 90-1912 to the frame using the factory sway bar mounting hardware. Leave loose. See **illustration 12.**

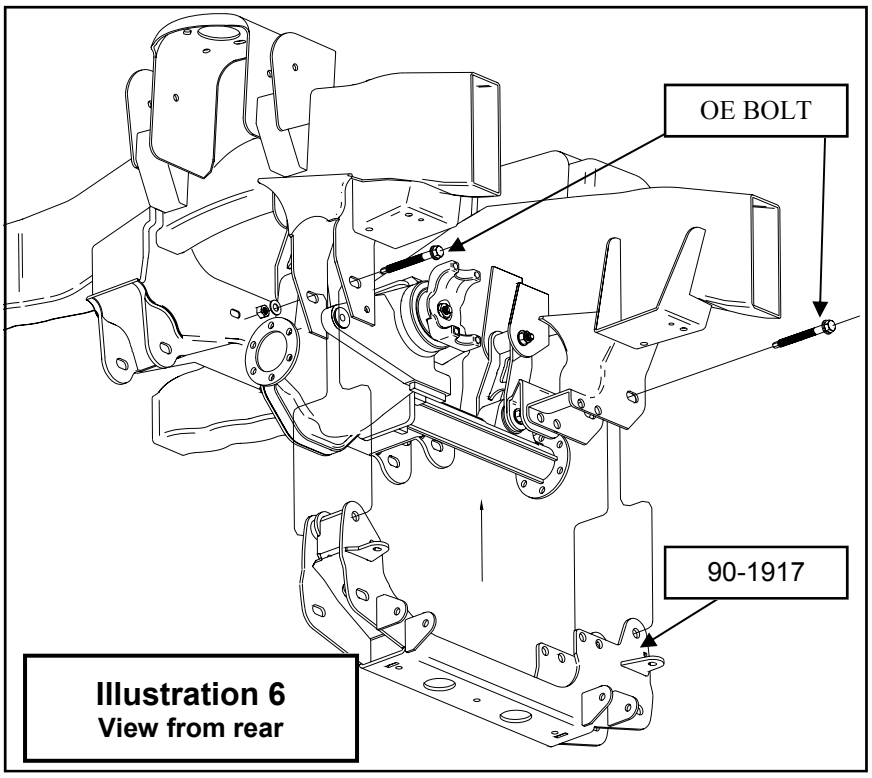

Illustration 6
View from rear

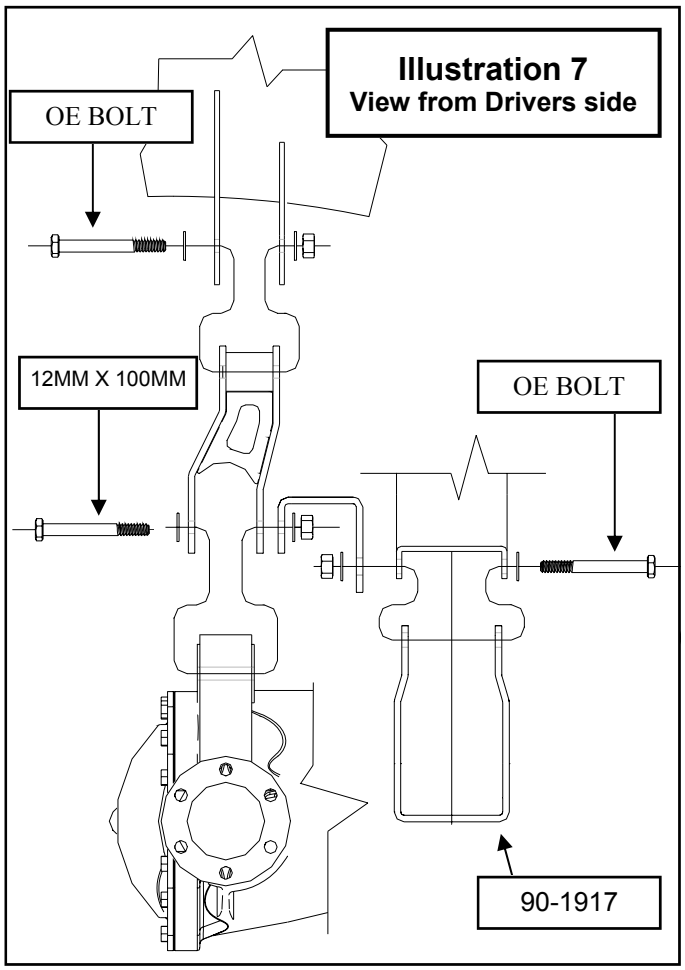

Illustration 7
View from Drivers side

42. Insert the 7/16” bolts with the washers from pack 90-6315 into the sway bar drops 90-1912. One bolt will pass through the tab from the rear cross member on bolt sides. See **illustration 12.**
43. Attach factory sway bar and mounts to the new drop brackets.
44. Swing the sway bar ends up into position and loosely connect to the a-arms, do not tighten until the truck is on the ground.
45. Torque the sway bar mount hardware to 60 ft./lbs.
46. Transfer all the parts from the factory knuckles to the supplied Pro-Comp knuckles.

    NOTE: Tighten all the factory hardware carefully. Be sure to follow the factory assembly procedures and torque specifications. The small aluminum vacuum cover bolts are Torqued to 11 ft/lbs.
47. **WITH THE COIL OVERS** install the new Pro-Comp coil over shock to the upper bracket 90-1977 with the supplied 1/2” X 2 3/4” hardware from pack 90-6318. Fasten upper bracket to truck using the supplied 7/16” hardware on the top. See **illustration 10a and 11.**

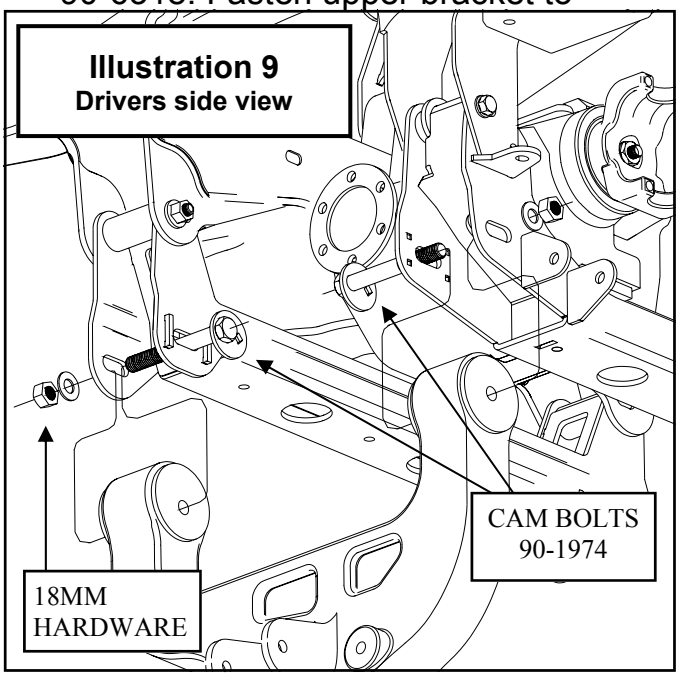

Illustration 9
Drivers side view

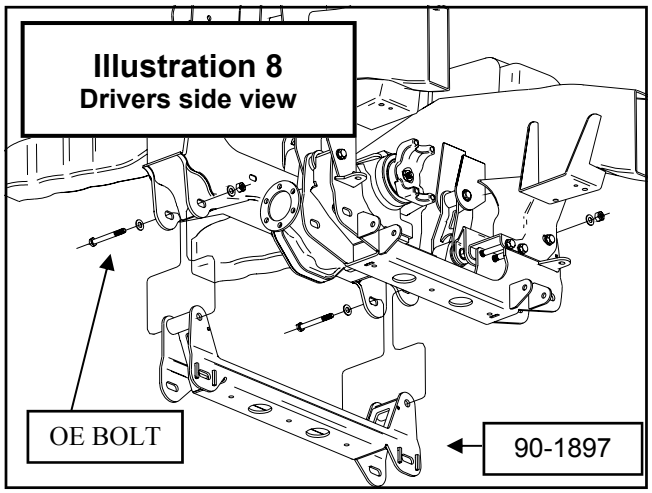

Illustration 8
Drivers side view

48. **WITH THE COIL SPACERS.** Attach the spacer to the top of the shock using the factory hardware. With the notch in the bottom ring facing the outside of the truck. Fit the shock and spacer into the stock mounting locations. Fasten using the supplied hardware on the top. See **illustration 10b.**
49. Install the OE bolt through the lower shock mount and a-arm. Torque to factory specifications.
50. Support lower A-arms. Position new front knuckles. Attach knuckle to lower ball joint. Torque to 111 ft/lbs.
51. Attach the CV axles to the differential and use thread locking compound and torque to factory specifications.
52. Then slide the CV through the knuckle. Attach the nut to the end of the CV shaft. Torque to 20 ft/lbs. and attach dust cap.
53. Attach the knuckle to the upper ball joint. Torque to 85 ft/lbs.
54. Turn tie rod 180 degrees and fasten tie rod end to the knuckle. Torque to 111 ft/lbs.
55. Connect the anti-lock wiring harness and sensor to the hub if applicable.
56. Attach the vacuum lines to the rear of

the hub.

57. Repeat the installation on the other side of the vehicle.
58. Install the front rotors on to the front hub.
59. Install the front calipers on to the front rotors by reinstalling the retaining bolts. Torque to factory specifications.

Illustration 10a
With coil over

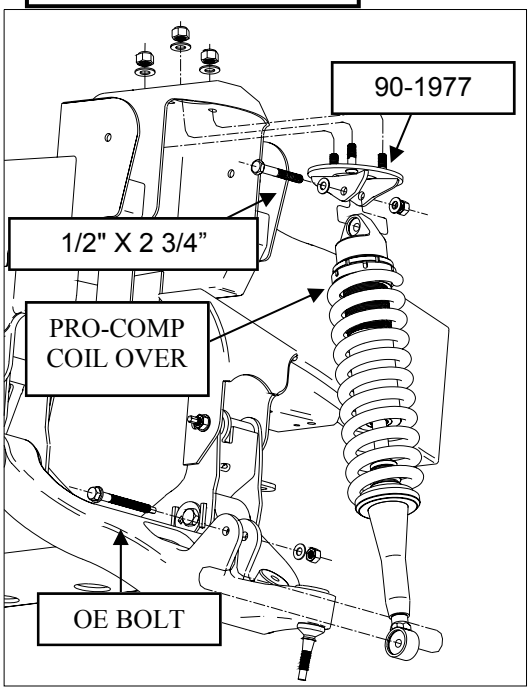

Illustration 10b
With coil spacer

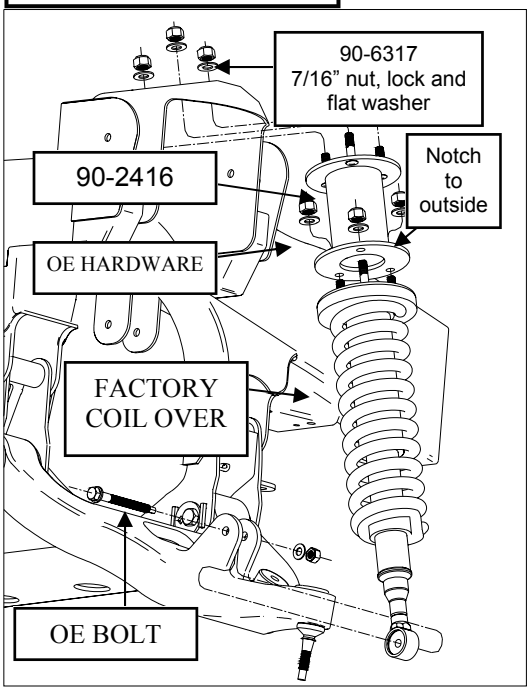

Illustration 11
With coil over

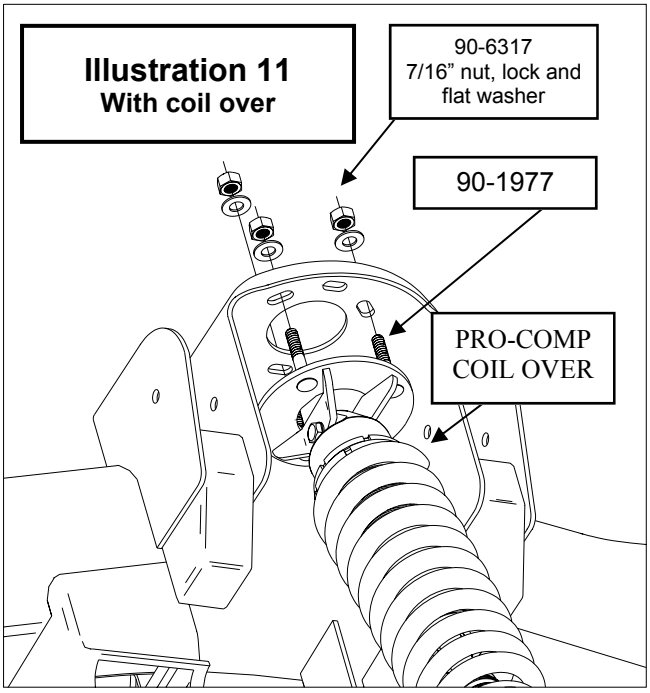

Illustration 12
Passenger side view

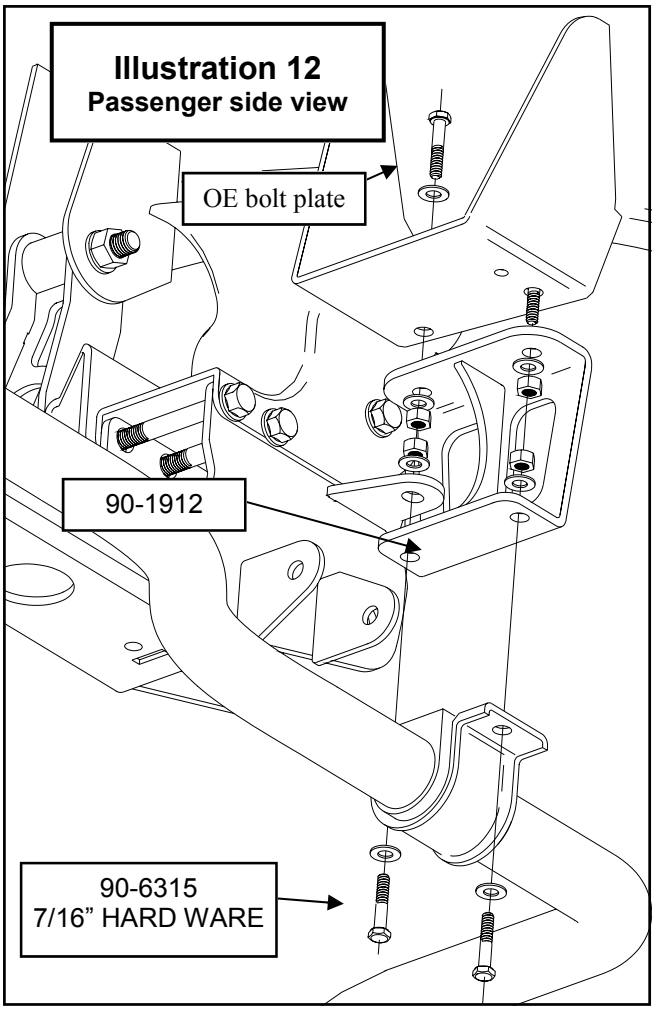

60. Remove stock brake line bracket from frame. Carefully remount the bracket with the supplied brake line drops 90-55089-3 (PASS) and 90-55089-4(DVR) in between bracket and frame. Use factory hardware to fasten the shorter end of the bracket to the frame. Position the drops, best for your application. Use the supplied hardware

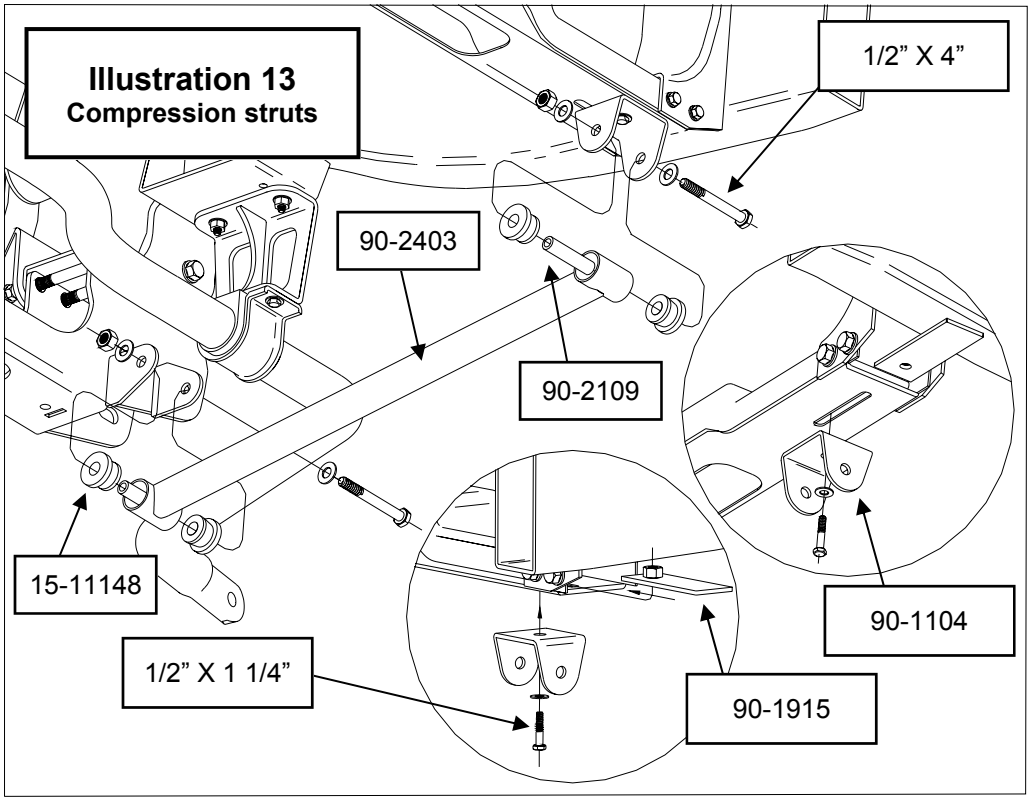

from pack 90-6299 to fasten OE bracket to the new brake line drop.

NOTE: 2005 models produced after 11/04 may require the use of longer brake line drops 90-3202 from hardware pack 90-6393. ***Carefully*** unbolt and bend the factory metal brake lines to allow them to be bolted to the bottom of the brake line drops 90-3202.

WARNING: Make sure the brake lines that you just modified are still in the Ford factory plastic retainers attached to the inside of the frame and that they are not resting against any moving parts.

61. Install the bushings and sleeves from hardware pack 90-6263 into the compression struts. See **illustration 13.**
62. Install compression struts into mounts on the rear cross member using supplied 1/2” X 4” hardware.
63. Place the supplied nut plates inside the transmission cross member and attach mounts 90-1104 using the supplied 1/2” X 1 1/4” hardware.
64. Rotate the compression struts up and secure them to the mounts using the supplied 1/2” X 4” hardware. See **illustration 13.**
65. Recheck all hardware for proper installation and torque at this time.
66. Reinstall the wheels and tires and lower the vehicle to the ground.
67. Torque sway bar end links to the lower control arm to 66 ft/lbs.
68. Torque the 18MM cam bolts to 180-200 ft/lbs.
69. Reinstall the wheels and tires and lower the vehicle to the ground. Torque the factory wheels to 150 ft/lbs. If you are using aftermarket wheels follow the manufacturers recommended specifications.
70. On both sides of the vehicle, check the routing of the brake lines and the ABS wire harnesses. There must be no pinching, rubbing, or stretching of either component. Use zip ties to secure these items. At full droop,

cycle the steering from lock to lock while observing the reaction of these components. Reposition them if needed.

71. On completion of the installation, have the suspension and headlights re-aligned.

72. After 100 miles recheck for proper torque on all newly installed hardware.

73. Recheck all hardware for tightness after off road use.

Rear installation

1. Block the front tires and raise the rear of the vehicle. Support the frame with jack stands forward of the rear springs.

2. Remove the rear wheels.

3. Remove the shocks on both sides of the vehicle. It may be necessary that you slightly raise the axle to unload the shocks for removal.

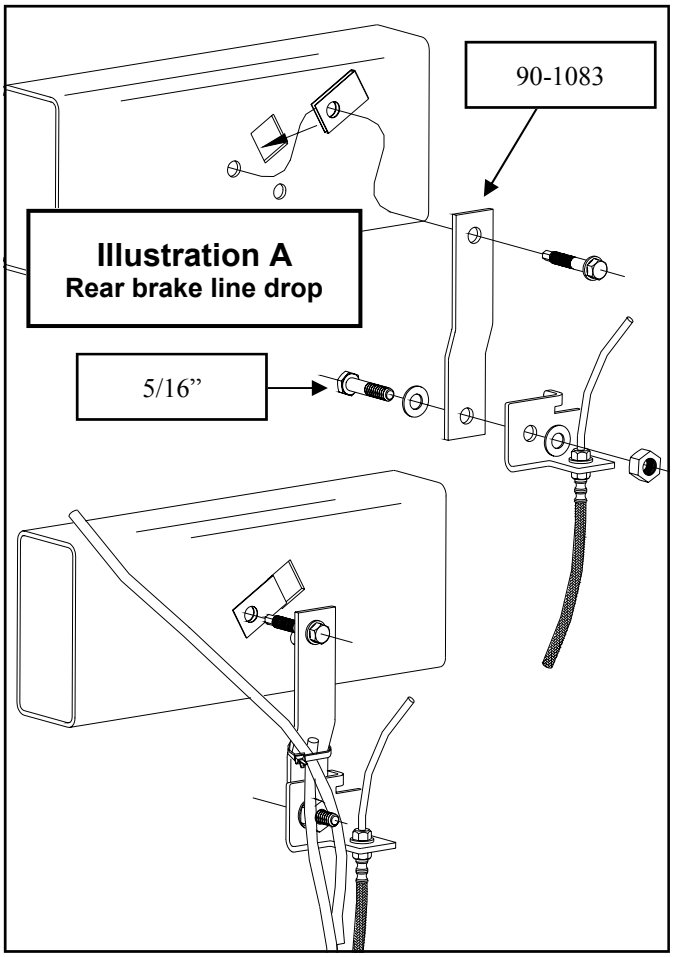

Illustration A
Rear brake line drop

4. On drivers side, unbolt the existing brake line bracket from the frame.

5. Install the supplied brake line extension bracket, 90-1083, to the frame using the OE hardware. Then bolt the factory bracket to the new bracket using the supplied 5/16” hardware from hardware pack 90-6314. See **Illustration A**.

6.Reroute rear ABS as necessary use the supplies zip ties to secure lines.

7.Support the rear axle with a floor jack and remove the U-bolts on the driver side. Loosen the U-bolts on the passenger side.

8. Install the lift block **(95-254F)** under the stock block on the axle pad, making sure the pins are fitted into the holes on the spring perch. Use your floor jack to raise the axle to the spring making sure the tabs on the factory block fit into the holes on the new lift block.

9. Secure the assembly with the U-bolts (13-90390) supplied in hardware pack and new high-nuts and washers from hardware pack 20-65302. Do not tighten the U-bolts at this time. See **Illustration C.**

NOTE: Make sure the block sits

flush on the axle perch.

10.Repeat the installation on the other side of the vehicle.✪

11.When the installation of the remaining side is complete, torque the U-bolts to 85 ft. lbs.

12.Insert the supplied 60859 sleeves in both end of the shocks.

13.Install your new Pro Comp shocks **(MX6009 or 929504 w/ shaft end up)** and torque this hardware to 66 ft. lbs.

14.Remove the factory emergency brake bracket from the truck by removing the OE hardware. Unhook emergency brake cable and remove from factory bracket by pinching the tangs on the line.

15.Slip the cable through new bracket PN 90-1955 for **2004/2005 model** and reconnect the emergency brake cable. Attach the supplied brake line drop bracket to the frame using OE hardware with the supplied 3/4" washer from hardware pack 90-6323 under the bracket. Torque the retaining nut to 222 ft. lbs. See **Illustration B**. For the **2006 model** attach the supplied brake line drop bracket PN 90-3272 to the frame using the OE retaining nut with the supplied 3/4" washer from hardware pack 90-6323 under the bracket. Secure the rear hole in the bracket using the 1/2" X 1 1/2" bolt and hardware from pack PN 90-6422 Torque the retaining nut to 222 ft. lbs.

16.Reinstall the wheels and tires and lower the vehicle to the ground.

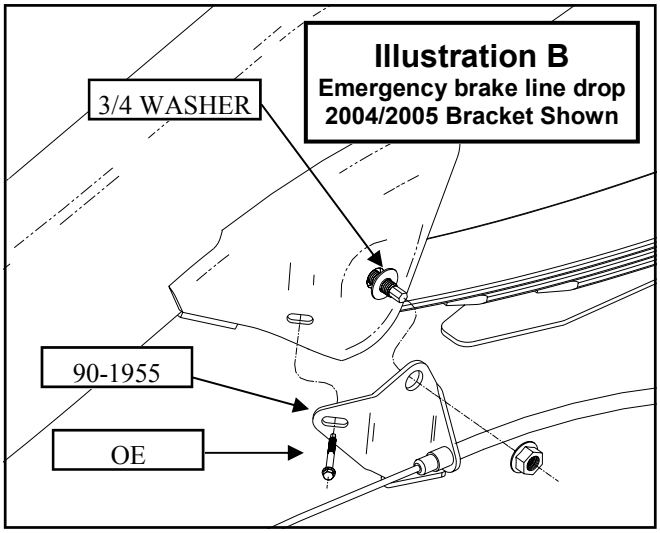

Illustration B
Emergency brake line drop 2004/2005 Bracket Shown

17.Reinstall the wheels and tires and lower the vehicle to the ground. Torque the factory wheels to 150 ft/lbs. If you are using aftermarket wheels follow the manufacturers recommended specifications.

18.Recheck all hardware for proper installation and torque at this time.

19.On completion of the installation, have the suspension and headlights re-

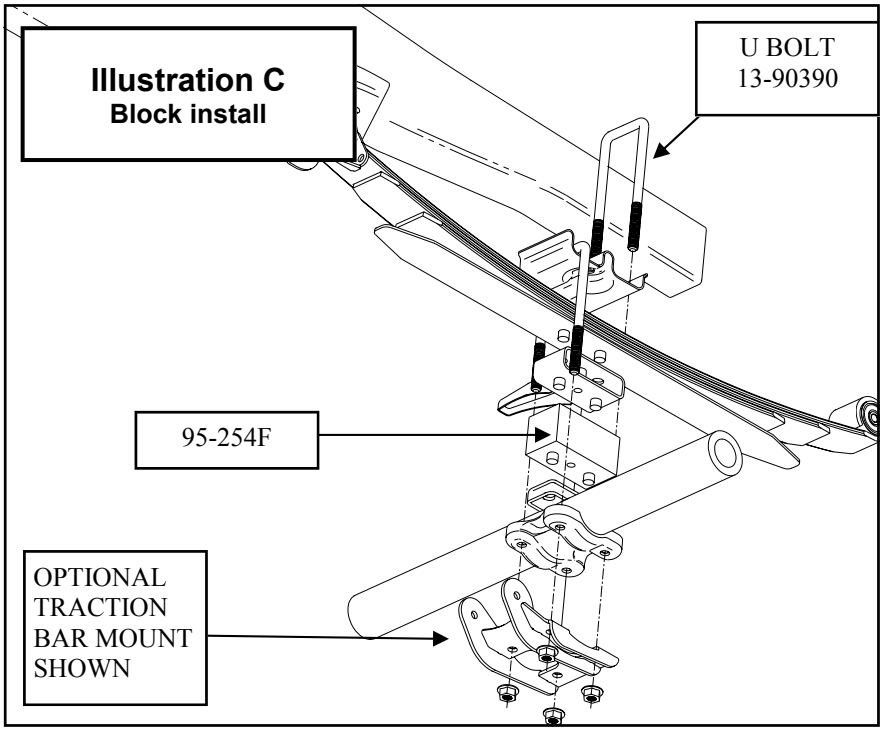

Illustration C
Block install

aligned.

20.After 100 miles recheck for proper torque on all newly installed hardware.

21.Recheck all hardware for tightness after off road use.✪

Use this only as a guide for hardware without a called out torque specification in the instruction manual.

Bolt Torque and ID

Decimal System			Metric System			
All Torques in Ft. Lbs. Maximums						
Bolt Size	Grade 5	Grade8	Bolt Size	Class 9.8	Class 10.9	Class 12.9
5/16	15	20	M6	5	9	12
3/8	30	45	M8	18	23	27
7/16	45	60	M10	32	45	50
1/2	65	90	M12	55	75	90
9/16	95	130	M14	85	120	145
5/8	135	175	M16	130	165	210
3/4	185	280	M18	170	240	290

1/2-13x1.75 HHCS

Grade 5 **Grade 8**
(No. of Marks + 2)

M12-1.25x50 HHCS

G = Grade (Bolt Strength)
D = Nominal Diameter (Inches)
T = Thread Count (Threads per Inch)
L = Length (Inches)
X = Description (Hex Head Cap Screw)

P = Property Class (Bolt Strength)
D = Nominal Diameter (Millimeters)
T = Thread Pitch (Thread Width, mm)
L = Length (Millimeters)
X = Description (Hex Head Cap Screw)

Notice to Owner operator, Dealer and Installer:

Vehicles that have been enhanced for off-road performance often have unique handling characteristics due to the higher center of gravity and larger tires. This vehicle may handle, react and stop differently than many passenger cars or unmodified vehicles, both on and off–road. You must drive your vehicle safely! Extreme care should always be taken to prevent vehicle rollover or loss of control, which can result in serious injury or even death. Always avoid sudden sharp turns or abrupt maneuvers and allow more time and distance for braking! Pro Comp reminds you to fasten your seat belts at all times and reduce speed! We will gladly answer any questions concerning the design, function, maintenance and correct use of our products.

Please make sure your Dealer/Installer explains and delivers all warning notices, warranty forms and instruction sheets included with Pro Comp product.

Application listings in this catalog have been carefully fit checked for each model and year denoted. However, Pro Comp reserves the right to update as necessary, without notice, and will not be held responsible for misprints, changes or variations made by vehicle manufacturers. Please call when in question regarding new model year, vehicles not listed by specific body or chassis styles or vehicles not originally distributed in the USA.

Please note that certain mechanical aspects of any suspension lift product may accelerate ordinary wear of original equipment components. Further, installation of certain Pro Comp products may void the vehicle's factory warranty as it pertains to certain covered parts; it is the consumer's responsibility to check with their local dealer for warranty coverage before installation of the lift.

Warranty and Return policy:

Pro Comp warranties its full line of products to be free from defects in workmanship and materials. Pro Comp's obligation under this warranty is limited to repair or replacement, at Pro Comp's option, of the defective product. Any and all costs of removal, installation, freight or incidental or consequential damages are expressly excluded from this warranty. Pro Comp is not responsible for damages and / or warranty of other vehicle parts related or non-related to the installation of Pro Comp product. A consumer who makes the decision to modify his vehicle with aftermarket components of any kind will assume all risk and responsibility for potential damages incurred as a result of their chosen modifications. Warranty coverage does not include consumer opinions regarding ride comfort, fitment and design. Warranty claims can be made directly with Pro Comp or at any factory authorized Pro Comp dealer.

IMPORTANT! To validate the warranty on this purchase please be sure to mail in the warranty card.

Claims not covered under warranty-

- Parts subject to normal wear, this includes bushings, bump stops, ball joints, tie rod ends and heim joints
  - Discontinued products at Pro Comp's discretion
- Bent or dented product
- Finish after 90 days
- Leaf or coil springs used without proper bump stops
- Light bulbs
- Products with evident damage caused by abrasion or contact with other items
- Damage caused as a result of not following recommendations or requirements called out in the installation manuals
- Products used in applications other than listed in Pro Comp's catalog
- Components or accessories used in conjunction with other manufacturer's systems
- Tire & Wheel Warranty as per Pro Competition Tire Company policy
- Warranty claims without "Proof of Purchase"
- Pro Comp Pro Runner coil over shocks are considered a serviceable shock with a one-year warranty against leakage only. Rebuild service and replacement parts will be available and sold separately by Pro Comp. Contact Pro Comp for specific service charges.
- Pro Comp accepts no responsibility for any altered product, improper installation, lack of or improper maintenance, or improper use of our products.

E-Mail: tech@explorerprocomp.com
Website: www.explorerprocomp.com
Fax: (619) 216-1474
Ph: (619) 216-1444

PLACE
WARRANTY REGISTRATION NUMBER
HERE: _____